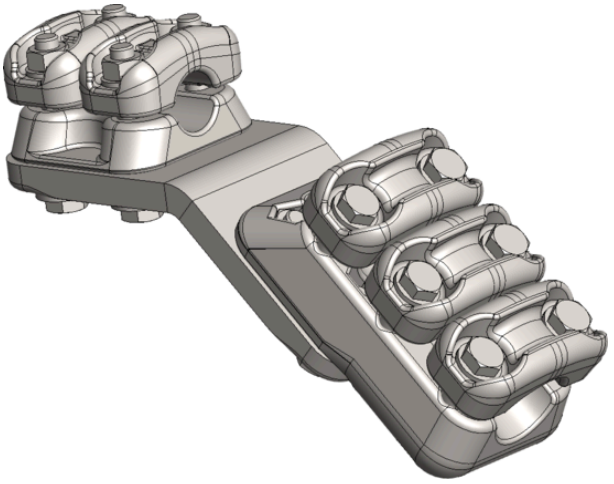

Tekniske Data

Melbye Group | Fordonsvägen 17 | SE-553 02 Jönköping | Tlf +46 36 332 07 00 | info@melbye.se | www.melbye.se
Melbye Group - Region Danmark | Fordonsvägen 17 | DK-553 02 Jönköping | Tlf +45 57 60 09 60 | melbye@melbye.as | www.melbye.as
Melbye Group | Prost Stabels vei 22 | Postboks 160 | NO-2019 Skedsmokorset | Tlf +47 63 87 01 50 | ms@melbye.no | www.melbye.no
Melbye Ltd |The Technology Centre Station Road, Framlingham Woodbridge, IP13 9EZ United Kingdom | +44 (0)7903 288561 | te@melbye.se | melbyefibre.com