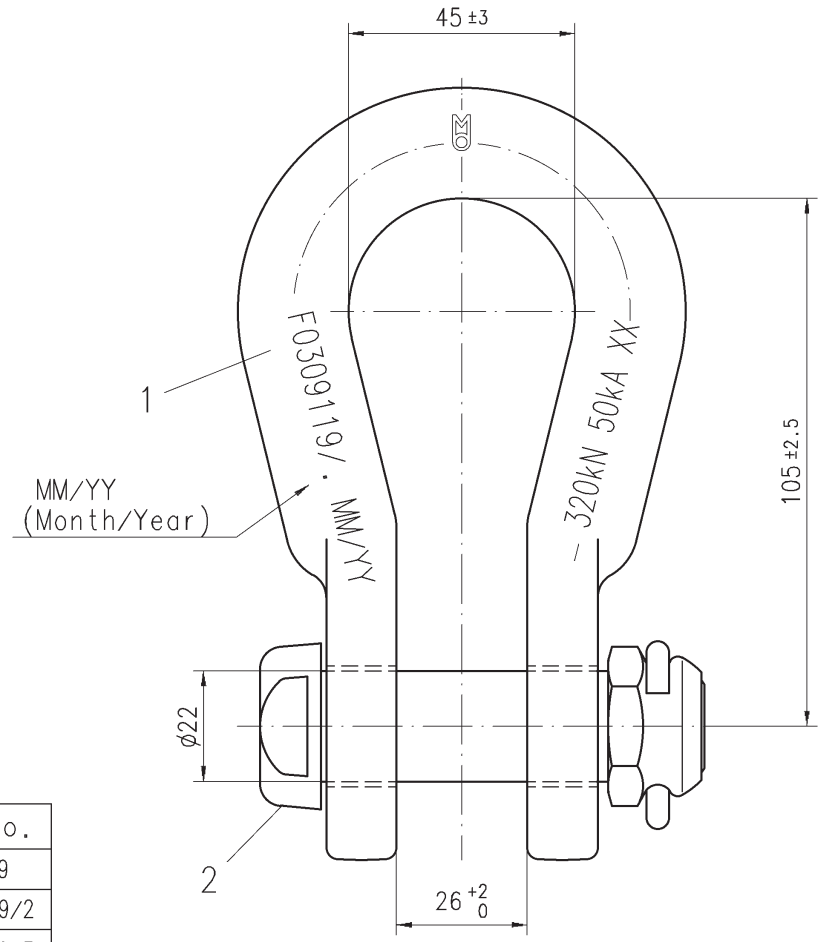

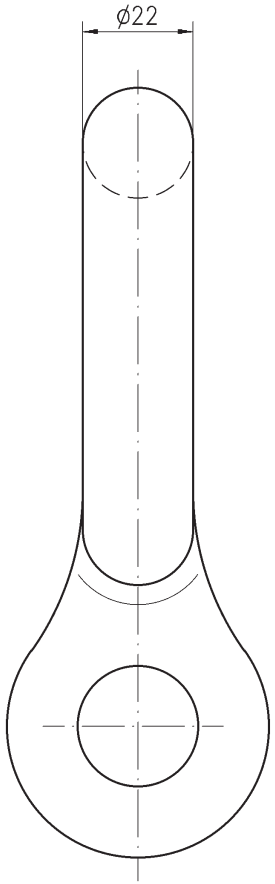

Type	Art.no.	Drg.no.
1	4250.23/10	F0309119
2	4250.23/10_VZ1	F0309119/2
3	4250.23/10_VZ3	F0309119/3

Type 1:
The average thickness of zinc coating: min. 85µm.
The average thickness of zinc coating for fasteners: min. 55µm.

Type 2:
The average thickness of zinc coating: min. 110µm.
The average thickness of zinc coating for fasteners: min. 55µm.

Type 3:
The average thickness of zinc coating: min. 130µm.
The average thickness of zinc coating for fasteners: min. 55µm.

Ltm	Qty	Description	Standard	Drg. no.	Art. no.	Material	Surface	Mass [kg]
2	1	Bolt S22x57	DIN 48073			8.8	hot dip galv.	
1	1	Shackle ø22				Steel	hot dip galv.	

2010	Date	Name
Drawn	15.06.	Mayer
Checked	-II-	

MOSDORFER KNILL GRUPPE

Replace for
Replaced by
Art. No. 4250.23/10
Sim. to drg.-no. F0309111

Scale 1:1

Title: Shackle ø22/105/26 S22

Type: K | Drg. No.: F0309119 | Rev.: d | Mod. | A3

No. of pages | Page

Tolerance acc. to: --- | Short circuit current: 50 kA 1s | Breaking load: 320 kN | Mass: approx. 1,3 kg

Letter	Revision	Date	Name	Modification	Date	Name
d	Type 3 added	22.08.2017	Boros			

This page and its indications is intellectual property of Mosdorfer Company and it isn't allowed to forward those information to a third party without the written assent of Mosdorfer company.