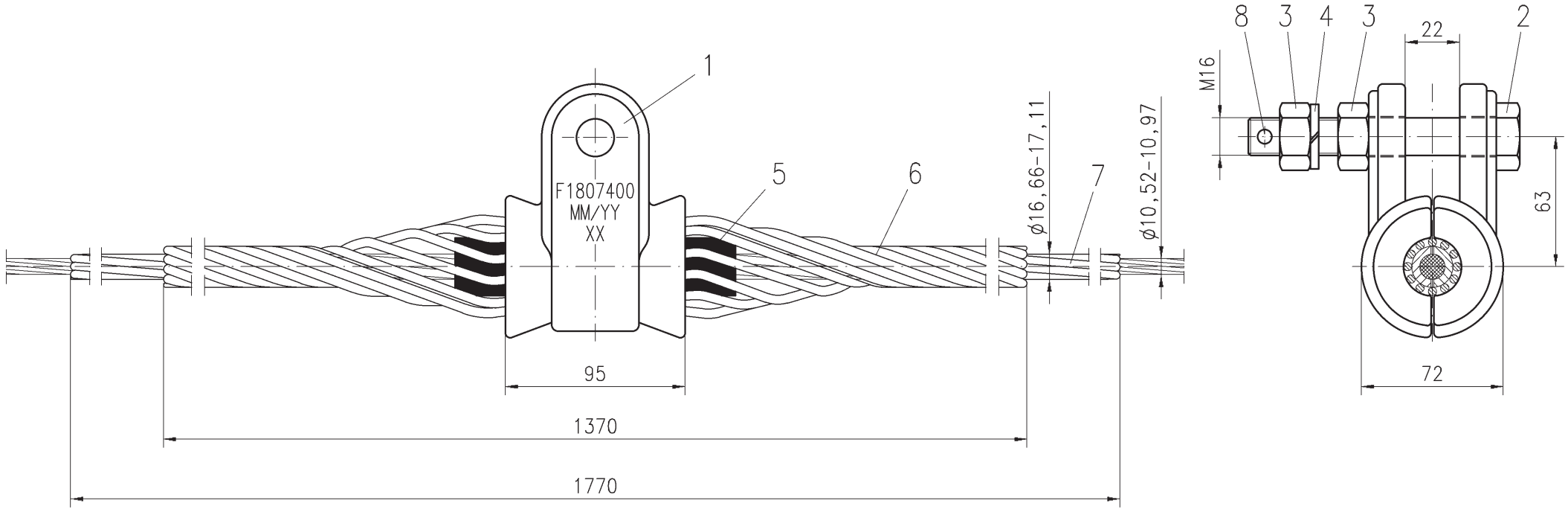

Ltm	Qty	Description	Standard	Drg. no.	Art. no.	Material	Surface	Mass [kg]
8	1	Cotter pin				Steel	stainless	
7	1	Reinf. rod ø10,52-11,09;12xø3,07		F1003011	4772.310/1	Al-alloy		
6	1	Armor grip ø16,41-17,11;11xø5,18		F1003003	4785.17	Al-alloy		
5	1	Insert ø16,41-17,11		D1807009/1	4786.17	Neoprene		
4	1	Spring washer B16	DIN 127			Steel	mech.galv.	
3	2	Hexagon nut M16	DIN 934			Steel	hot dip galv.	
2	1	Hexagon screw M16				Steel	hot dip galv.	
1	1	AGS-clamp ø16,41-19,07		F1807026	4360.64/A	Al-alloy		

2010	Date	Name
Drawn	12.05.	
Checked	-II-	

MOSDORFER AUSTRIA

Replace for
Replaced by
Art. No. 4362.00/07/3/A

Sim. to drg.-no. F1807173

Scale ---

Title: AGS-clamp for OPGW ø10,52-10,97 mm

Drg. No. F1807400

Rev. | Mod. | A3

No. of pages | Page

Tolerance acc. to: ISO 2768 v | Short circuit current: 25 kA 1s | Breaking load: 70 kN | Mass: approx. 3,1 kg

This page and its indications is intellectual property of Mosdorfer Company and it isn't allowed to forward those information to a third party without the written assent of Mosdorfer company.

Letter | Revision | Date | Name | Number | Modification | Date | Name