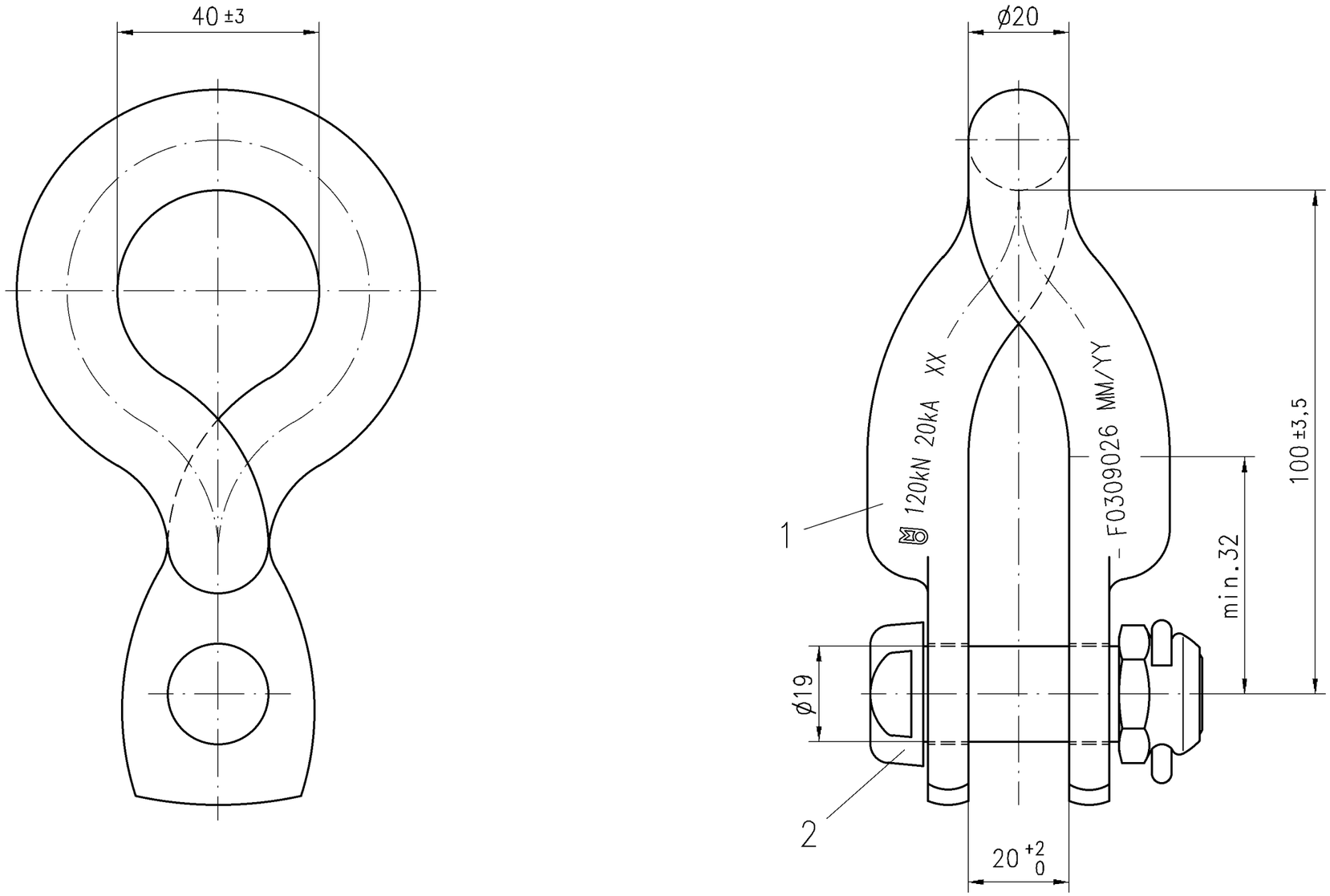

Ltm	Qty	Description	Standard	Drg. no.	Art. no.	Material	Surface	Mass [kg]
2	1	Bolt 19x38				8.8	hot dip galv.	
1	1	Shackle ø20				Steel	hot dip galv.	

2018	Date	Name
Drawn	15.11.	Grimm
Checked	15.11.	Zechner

MOSDORFER KNILL GRUPPE

Replace for B22.724
Replaced by
Art. No. 4250.41/1
Sim. to drg.-no.

Scale 1:1

Title: Shackle twisted
ø20/100/20, B19

Type: K
Drg. No.: F0309026
Rev.: c
Mod.:
A3
No. of pages
Page

Tolerance acc. to: ISO 2768-vL | Short circuit current: 20 kA 1s | Breaking load: 120 kN | Mass: approx. 0,9 kg

Letter	Revision	Date	Name
C	Revision adaption without modifikation	15.11.2018	Grimm

Number	Modification	Date	Name

This page and its indications is intellectual property of Mosdorfer Company and it isn't allowed to forward those information to a third party without the written assent of Mosdorfer company.