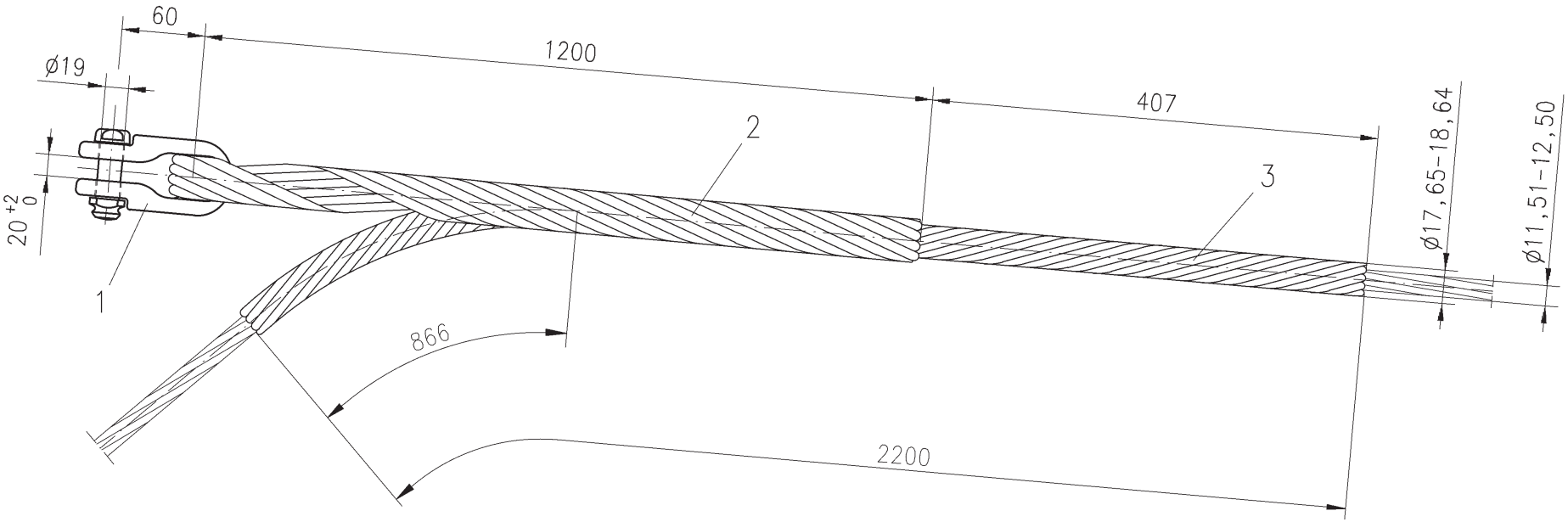

For right hand layed OPGW
Minimum failing load = 95% of UTS of OPGW

Ltm	Qty	Description	Standard	Drg. no.	Art. no.	Material	Surface	Mass [kg]
3	1	Reinf.rodø11,51-12,50;13x3,07/2200				Al-alloy		
2	1	Dead end ø17,65-19,40;8x3,25/1200				ACS		
1	1	Thimble clevis				Cast iron	hot dip galv.	

2019	Date	Name
Drawn	10.01.	Boros
Checked	10.01.	Spiljar

MOSDORFER KNILL GRUPPE

Replace for
Replaced by
Art. No. 4480.01
Sim. to drg.-no. F1806001

Scale: NTS

Title: Dead end set
OPGW ø11,51-12,50mm w.al-or al-alloy layer

Type: K
Drg. No.: F1806042
Rev.: c
Mod.:
A3
No. of pages
Page

Tolerance acc. to: ISO 2768-vL | Short circuit current: --- kA 1s | Breaking load: --- kN | Mass: approx. 3,3 kg

Letter	Revision	Date	Name
C	Rev. adaption without modification	10.01.2019	Boros

Number	Modification	Date	Name

This page and its indications is intellectual property of Mosdorfer Company and it isn't allowed to forward those information to a third party without the written assent of Mosdorfer company.