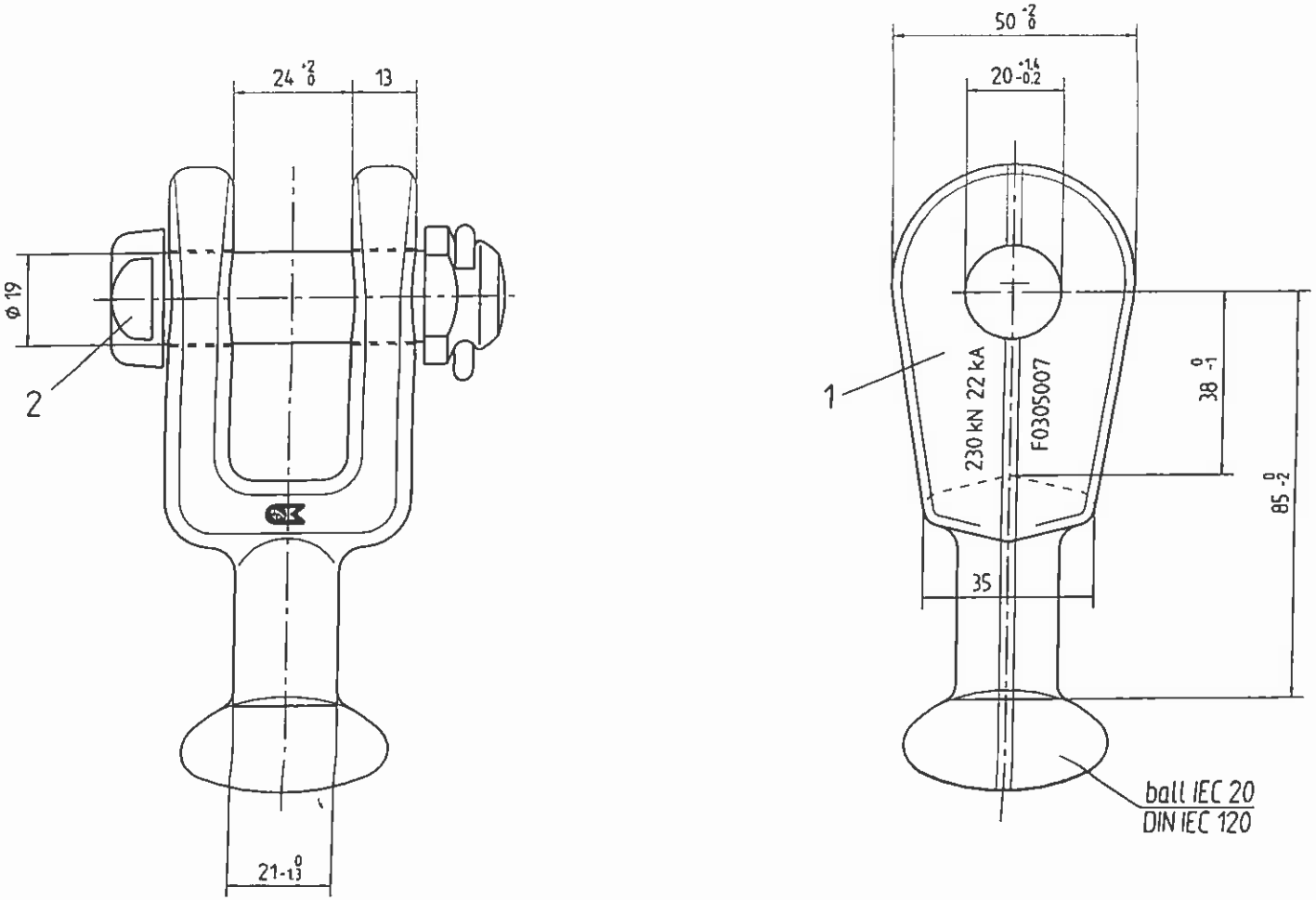

Item	Qty.	Description	Standard	Drg.-nr.	Art.-nr./Acc.-nr.	Material	Remark
2	1	bolt S 19 x 52	DIN 48073		1046.18/0	8.8	hot dip galv.
1	1	ball clevis	DIN IEC 120		MR 140.075	Ck 45 h. l.	-:-:-

1995	Date	Name
Drwg.	29.03	
Checked		

MOSDORFER Ges. m. b. H. WEIZ - AUSTRIA

Replace for 24 512.22.347 u. 21.181

Replaced by

Art.-nr. 4217.27/1

Sim. to drg.-nr.

Scale 1 : 1

Title: Ball clevis IEC 20

Drg.-nr. F0305007

Mod.

A3

Tolerances acc. to DIN 7168 c | Short circuit current: 22 kA 1s | Breaking load: 230 kN | Weight: ~10 kg

Issue	Modification	Date	Name

This page and its indications is intellectual property of Mosdorfer company and it isn't allowed to forward those information to a third party without the written assent of Mosdorfer company.